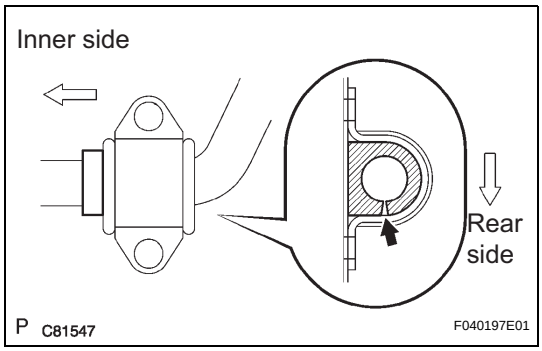

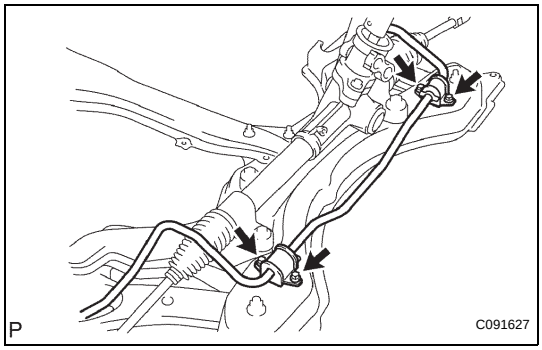

INSTALLATION

1. **INSTALL STABILIZER BAR FRONT**
   (a) Install 2 front stabilizer bar bushes No. 1, front stabilizer bracket No. 1 LH and front stabilizer bracket No. 1 RH to the stabilizer bar front.
   HINT:
   Install the bushing to the inner side of the bushing stopper on the stabilizer bar.

   (b) Install the stabilizer bar front and 4 bolts to the front suspension crossmember sub-assembly.
   Torque: 19 N*m (194 kgf*cm, 14 ft.*lbf)

2. **INSTALL FRONT SUSPENSION CROSSMEMBER SUB-ASSEMBLY (See page SP-25)**

3. **INSTALL RACK & PINION POWER STEERING GEAR ASSEMBLY (See page SP-26)**

4. **INSTALL FRONT SUSPENSION ARM SUB-ASSEMBLY LOWER NO. 1 LH (See page SP-26)**

5. **INSTALL FRONT SUSPENSION ARM SUB-ASSEMBLY LOWER NO. 1 RH**
   HINT:
   Install the RH side by the same procedures as the LH side.

6. **INSTALL FRONT STABILIZER LINK ASSEMBLY LH**
   (a) Install the stabilizer bar link with the 2 nuts.
   Torque: 74 N*m (755 kgf*cm, 55 ft.*lbf)
   HINT:
   If the ball joint turns together with the nut, use a hexagon wrench (6 mm) to hold the stud.

7. **INSTALL FRONT STABILIZER LINK ASSEMBLY RH**
   HINT:
   Install the RH side by the same procedure as the LH side.

8. **INSTALL FRONT WHEEL**
   Torque: 103 N*m (1,050 kgf*cm, 76 ft.*lbf)

9. **INSPECT AND ADJUST FRONT WHEEL ALIGNMENT**
   HINT:
   See page SP-4